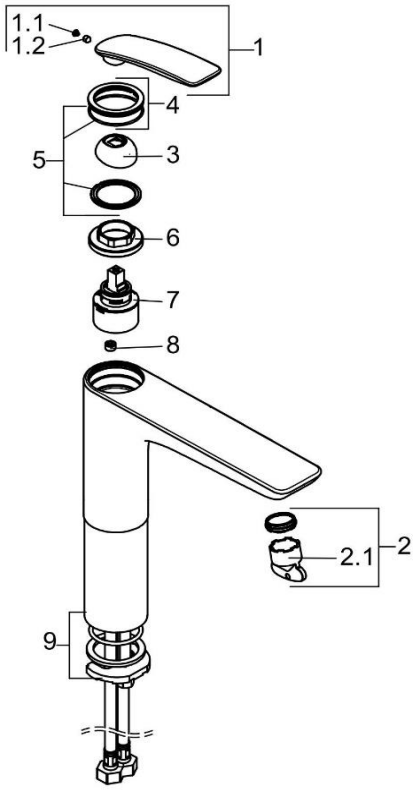


| 522988775 | | Waschtisch-Einhandmischer DN 15 | single lever basin mixer DN 15 |
|---|---|---|---|
| 1 | 7498939-00 | HEBEL BALANCE | LEVER BALANCE |
| 1.1 | 92204601-00 | GEWINDESTIFT | GRUB SCREW |
| 1.2 | 7488700-00 | STOPFEN | PLUG |
| 2 | 7417900-00 | STRAHLREGLER | AERATOR |
| 2.1 | 93087600-00 | STRAHLREGLERSCHLÜSSEL | WRENCH FOR AERATOR |
| 3 | 93009705-00 | ABDECKKAPPE | COVER CAP |
| 4 | 7473005-00 | ABDECKKAPPE | COVER CAP |
| 5 | 7488200-00 | DICHTUNGSSATZ | SEALING SET |
| 6 | 92200737-00 | SPANNSCHRAUBE | FASTENING SCREW |
| 7 | 7560500-00 | STEUEREINHEIT | CERAMIC CARTRIDGE |
| 8 | 7484100-00 | MENGENREGLER | FLOW REGULATOR |
| 9 | 7459400-00 | BEFESTIGUNGSSATZ | MOUNTING KIT |
| | | | |
| | | | |
| | | | |
| | | | |
| | | | |
| | | | |
| | | | |
| | | | |
| | | | |
| | | | |