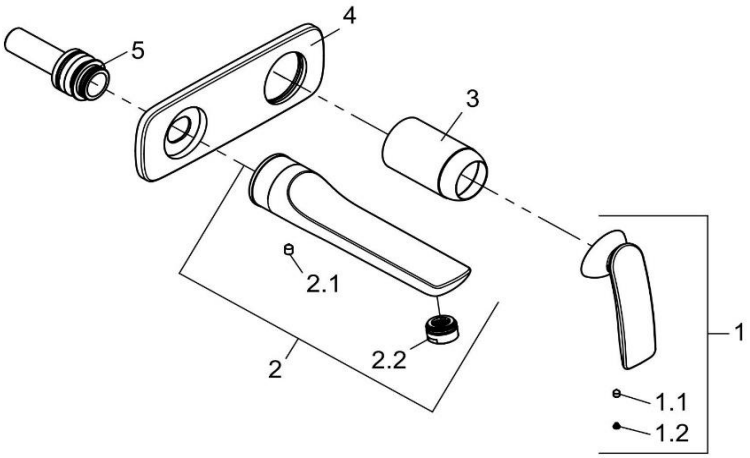


| 522460575 | | Waschtisch-Wandarmatur DN 15 | wall mounted basin mixer DN 15 |
|---|---|---|---|
| 1 | 7506405-00 | HEBEL BALANCE | LEVER BALANCE |
| 1.1 | 92204601-00 | GEWINDESTIFT | GRUB SCREW |
| 1.2 | 7488700-00 | STOPFEN | PLUG |
| 2 | 7355105-00 | AUSLAUF | SPOUT |
| 2.1 | 91709235-00 | GEWINDESTIFT | GRUB SCREW |
| 2.2 | 7339005-00 | STRAHLREGLER | AERATOR |
| 3 | 92066705-00 | ABDECKHÜLSE | COVER SLEEVE |
| 4 | 7355305-00 | ROSETTE | ESCUTCHEON |
| 5 | 92504211-00 | O - RING | O-RING |
| | | | |
| | | | |
| | | | |
| | | | |
| | | | |
| | | | |
| | | | |
| | | | |
| | | | |
| | | | |
| | | | |
| | | | |
| | | | |